PARTS LIST NO. 530-402325	HUSQVARNA ®PARTS LIST	MODEL 340H
DATE 12/15/94 — NEW	Note: Illustration may differ from actual model due to design changes	

⚠ WARNING
All repairs, adjustments and maintenance not described in the Operator's Manual must be performed by qualified service personnel.

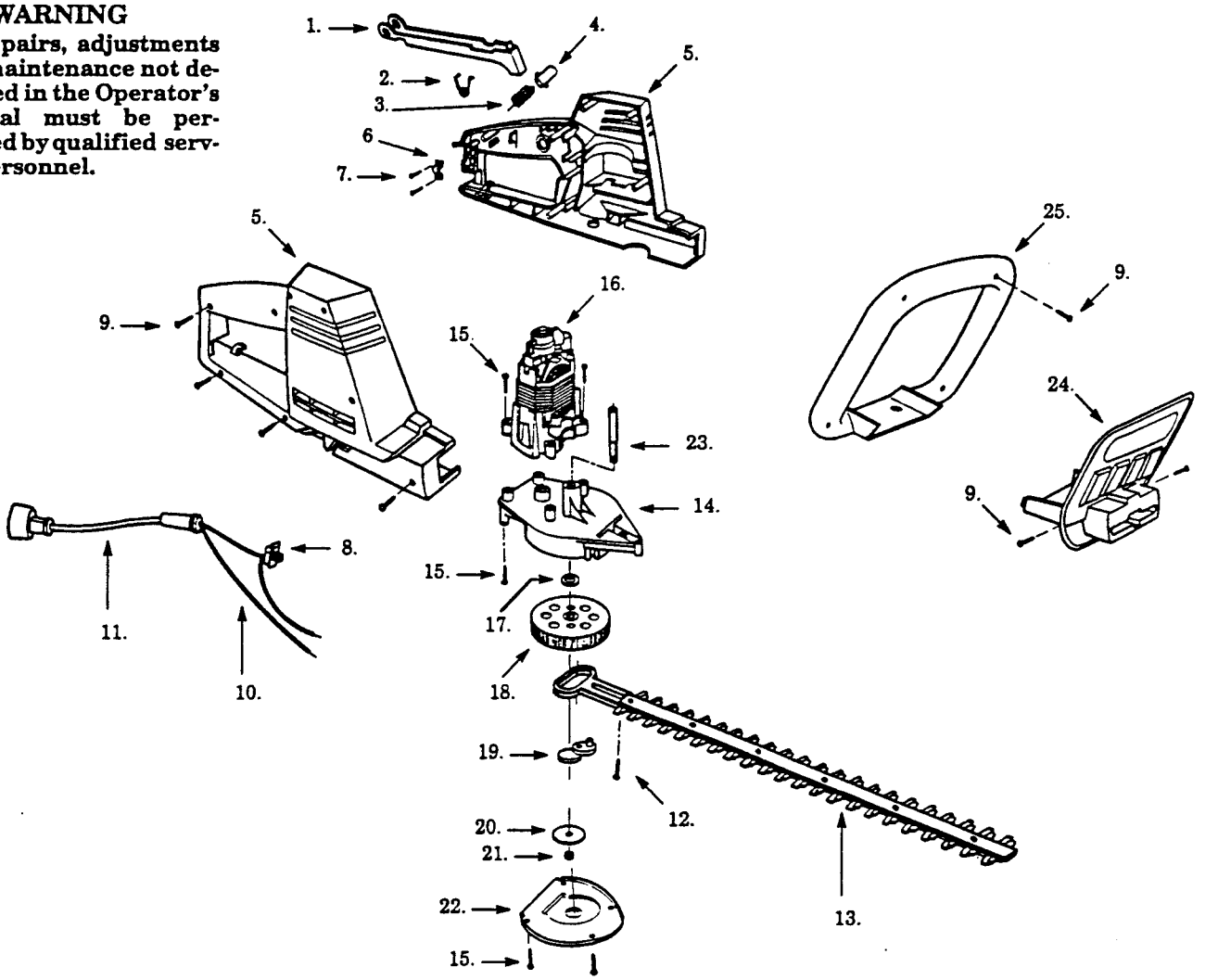

Ref.	Part No.	Description	Ref.	Part No.	Description
1.	530-401927	Trigger Switch	19.	530-400980	Drive Cam
2.	530-401222	Spring Clip	20.	530-400876	Washer
3.	530-401054	Spring-Trigger Lock	21.	530-401229	Locknut
4.	530-401380	Button-Trigger Lock	22.	530-400860	Plate Cover
5.	530-400916	Housing Set (R&L)	23.	530-400872	Shaft
6.	530-025666	Cordset Clamp	24.	530-400929	Shield
7.	534-826801	Screw	25.	530-400958	Handle Ass'y. (Incl. 9)
8.	530-401503	Switch (On/Off)			
9.	530-340179	Screw			
10.	530-402069	Harness Ass'y. (Incl. 8 & 11)	Not Shown		
11.	530-402070	Cordset			
12.	530-016086	Screw			
13.	530-400879	Blade Ass'y.		530-083257	Operator Manual
14.	530-400877	Gear Box Ass'y.		530-085213	Carton
15.	530-015875	Screw		530-400981	Carton Contents Bag
16.	530-400866	Motor Ass'y.			
17.	530-401228	Washer			
18.	530-400859	Gear			

✓ = NEW PART NUMBER FOR THIS IPL ★ = REFER TO THE SERVICE REFERENCE INDICATED FOR MORE INFORMATION. (LOCATED AT END OF IPL)